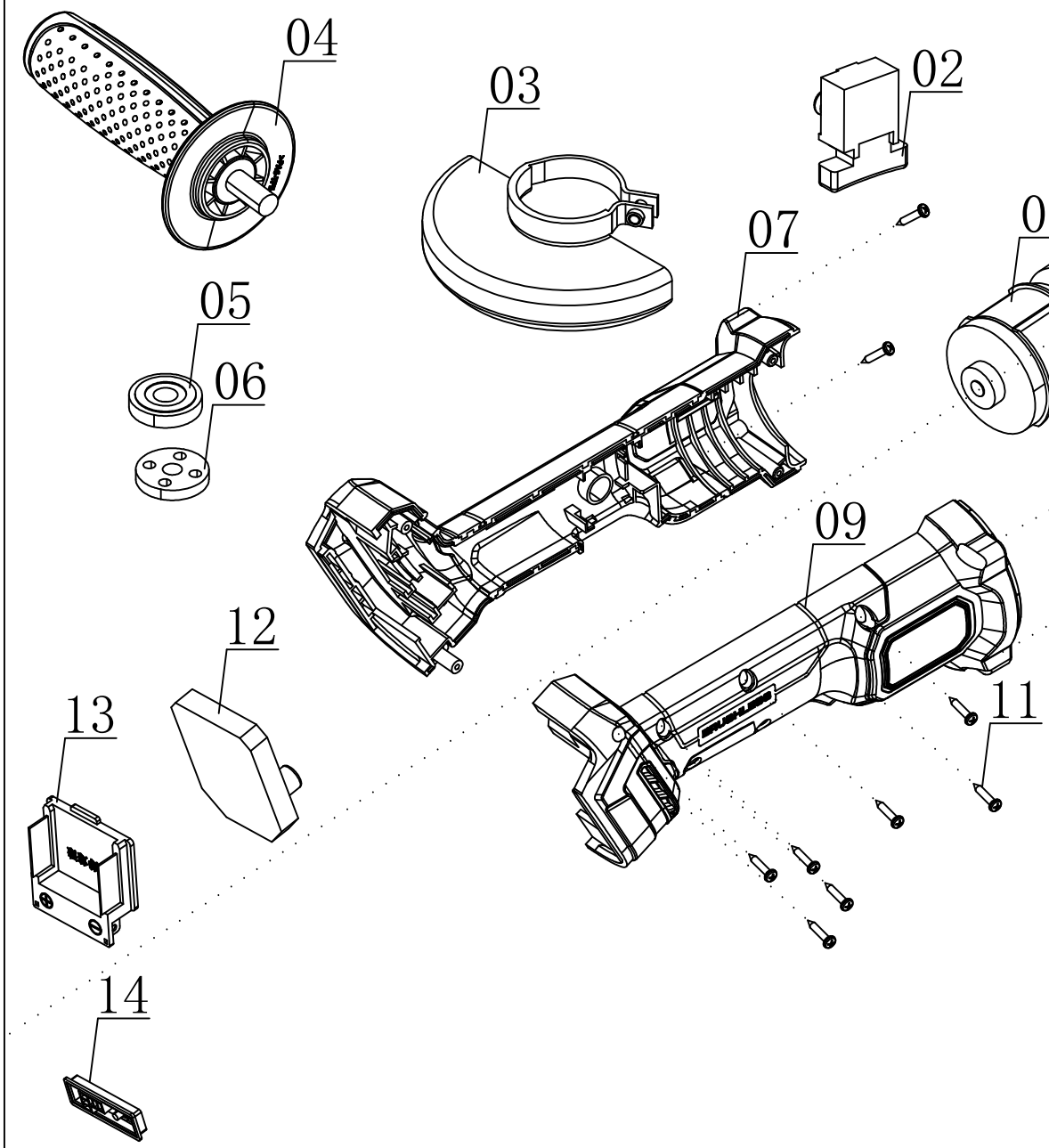

14	ML-S-DLXSAJ	Battery display button	1	PA6-GF30
13	ML-S-DCJCJ	Battery contact pin	1	PA6-GF30
12	ML-S-BLDCQDB	Brushless motor drive board	1	PCB
11	ML-S-LS	Screws	5	STEEL
10	ML-S-LTLS	Aluminum head screws	4	STEEL
9	ML-S-JK-U	Upper machine case	1	PA6-GF30
8	ML-S-BLDC	Brushless motor	1	STEEL
7	ML-S-JK-D	Lower machine case	1	PA6-GF30
6	ML-S-SYB	Upper pressure plate	1	STEEL
5	ML-S-XYB	Lower pressure plate	1	STEEL
4	ML-S-BS	Handle	1	PP
3	ML-S-AQBHZ	Safety protection cover	1	STEEL
2	ML-S-XHKG	Signal switch	1	PA6-GF30
1	ML-S-LTZC	Aluminum head assembly	1	ALUMINUM
Serial Number	Part Number	Name EN	Quantity	Specifications
	Product Breakdown Diagram		Nantong Meile Precision Machinery	
	Product Phase	Scale		
	Mass Production	1:1	ML-A004	
Total 1 Sheets, Sheet Number 1			Version	A1