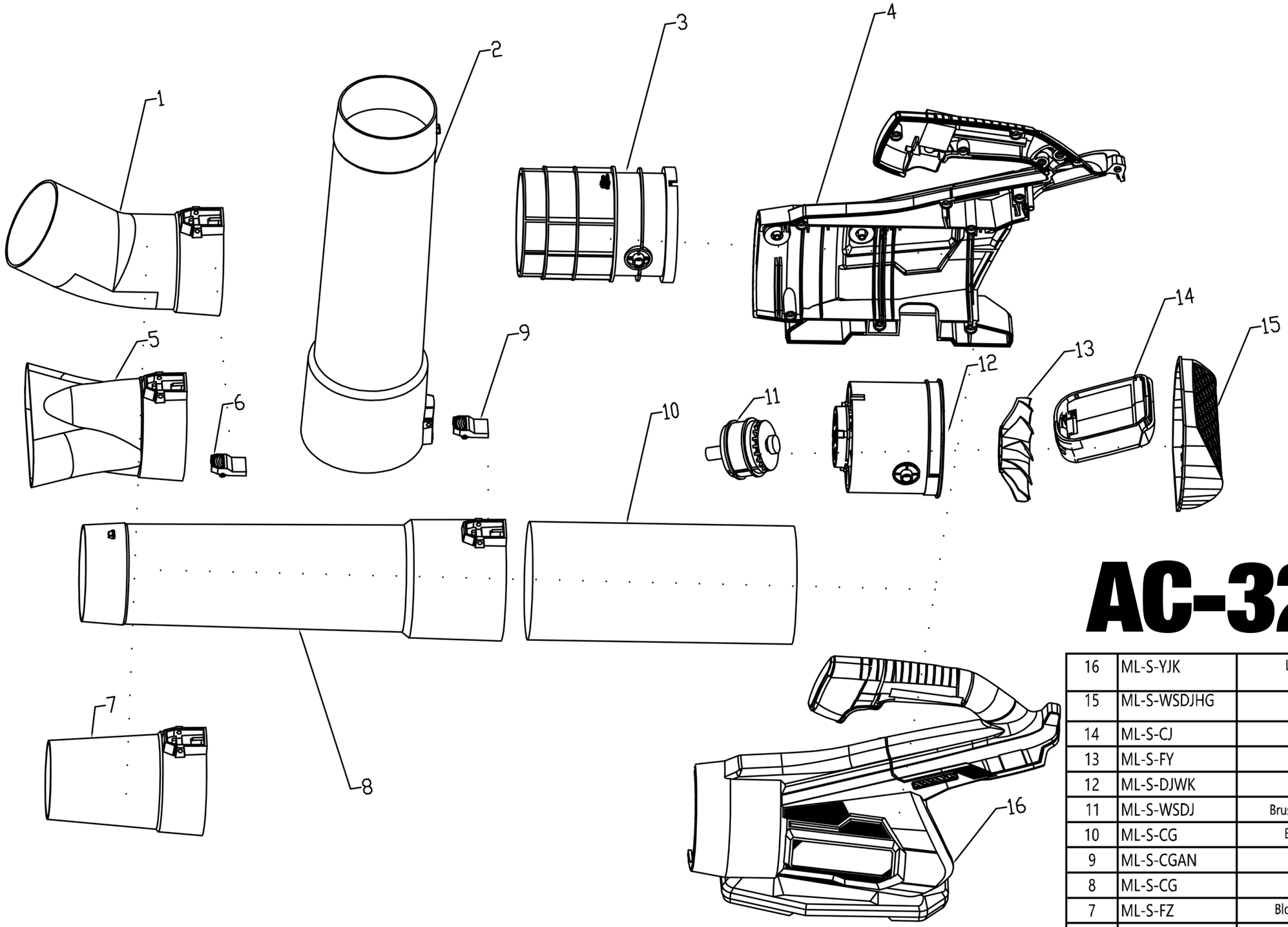

AC-3226BL

Serial Number	Part Number	Name EN	Quantity	Specifications
16	ML-S-YJK	Lefting housing	1	TPE+PA6-GF30
15	ML-S-WSDJHG	Back cover	1	PA6-GF30
14	ML-S-CJ	AC plug pin	1	PA6-GF30+STEEL
13	ML-S-FY	Impeller blade	1	PA6-GF30
12	ML-S-DJWK	Motor housing	1	PA6-GF30+STEEL
11	ML-S-WSDJ	Brushless motor 4820	1	PA6-GF30+STEEL
10	ML-S-CG	Blow dryer tube	1	PA6-GF30
9	ML-S-CGAN	Button	1	PA6-GF30
8	ML-S-CG	Blow tube	1	PA6-GF30
7	ML-S-FZ	Blower dryer nozzle	1	TPE
6	ML-S-AN	Button	1	PA6-GF30
5	ML-S-YZG	Duckbill nozzle	1	PA6-GF30
4	ML-S-YJK	Right casing of the machine	1	TPE+PA6-GF30
3	ML-S-CG	Blow dryer tube	1	PA6-GF30
2	ML-S-YCZ	Blow dryer nozzle extension	1	PA6-GF30
1	ML-S-WZ	Curved nozzle attachment	1	PA6-GF30