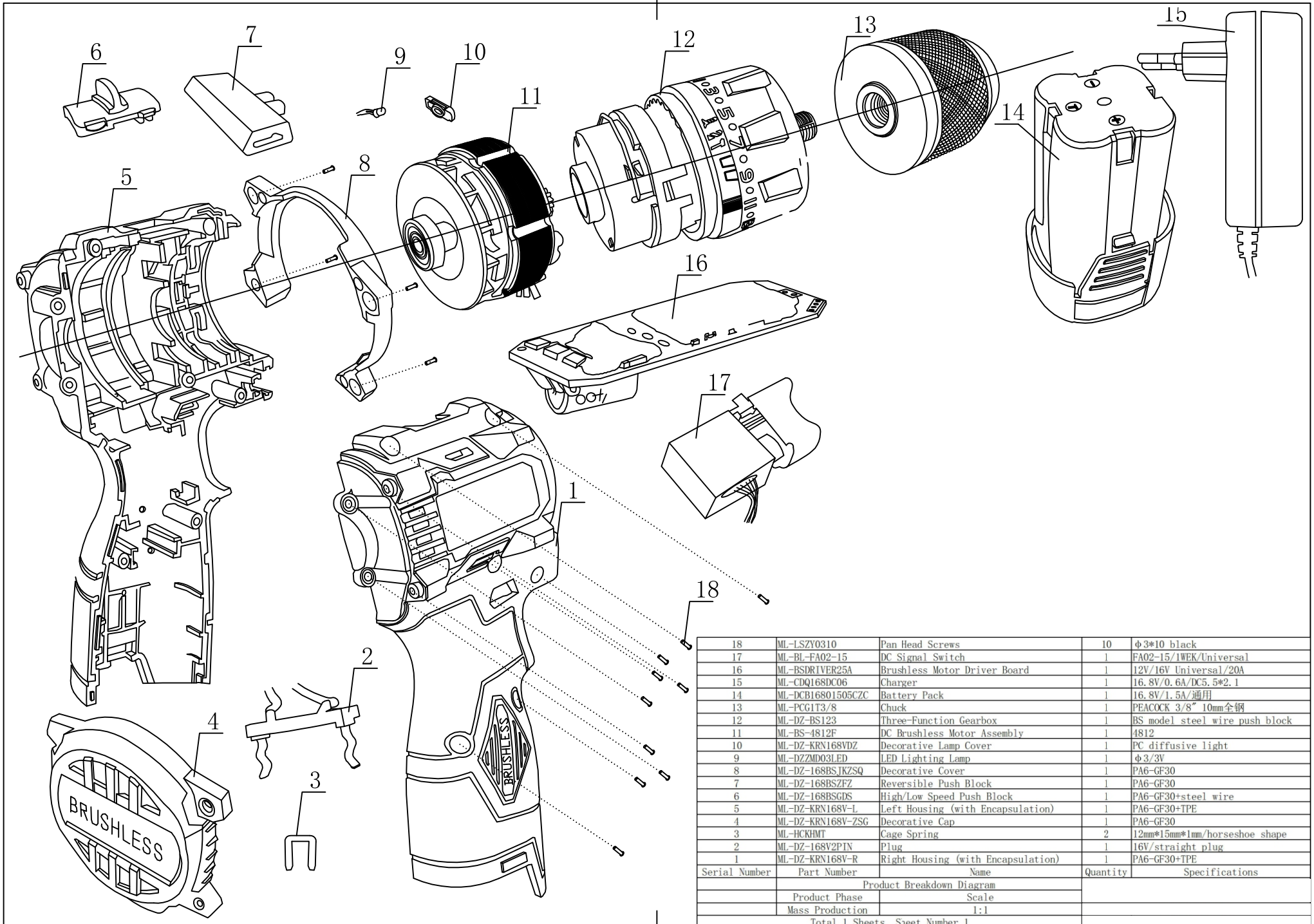

Serial Number	Part Number	Name	Quantity	Specifications
18	ML-LSZY0310	Pan Head Screws	10	φ3*10 black
17	ML-BL-FA02-15	DC Signal Switch	1	FA02-15/1WEK/Universal
16	ML-BSDRIVER25A	Brushless Motor Driver Board	1	12V/16V Universal/20A
15	ML-CDQ168DC06	Charger	1	16.8V/0.6A/DC5.5*2.1
14	ML-DCB16801505CZC	Battery Pack	1	16.8V/1.5A/通用
13	ML-PCG1T3/8	Chuck	1	PEACOCK 3/8" 10mm全钢
12	ML-DZ-BS123	Three-Function Gearbox	1	BS model steel wire push block
11	ML-BS-4812F	DC Brushless Motor Assembly	1	4812
10	ML-DZ-KRN168VDZ	Decorative Lamp Cover	1	PC diffusive light
9	ML-DZZMD03LED	LED Lighting Lamp	1	φ3/3V
8	ML-DZ-168BSJKZSQ	Decorative Cover	1	PA6-GF30
7	ML-DZ-168BSZFZ	Reversible Push Block	1	PA6-GF30
6	ML-DZ-168BSGDS	High/Low Speed Push Block	1	PA6-GF30+steel wire
5	ML-DZ-KRN168V-L	Left Housing (with Encapsulation)	1	PA6-GF30+TPE
4	ML-DZ-KRN168V-ZSG	Decorative Cap	1	PA6-GF30
3	ML-HCKHMT	Cage Spring	2	12mm*15mm*1mm/horseshoe shape
2	ML-DZ-168V2PIN	Plug	1	16V/straight plug
1	ML-DZ-KRN168V-R	Right Housing (with Encapsulation)	1	PA6-GF30+TPE
	Product Breakdown Diagram			
	Product Phase	Scale		
	Mass Production	1:1		
	Total 1 Sheets, Sheet Number 1			