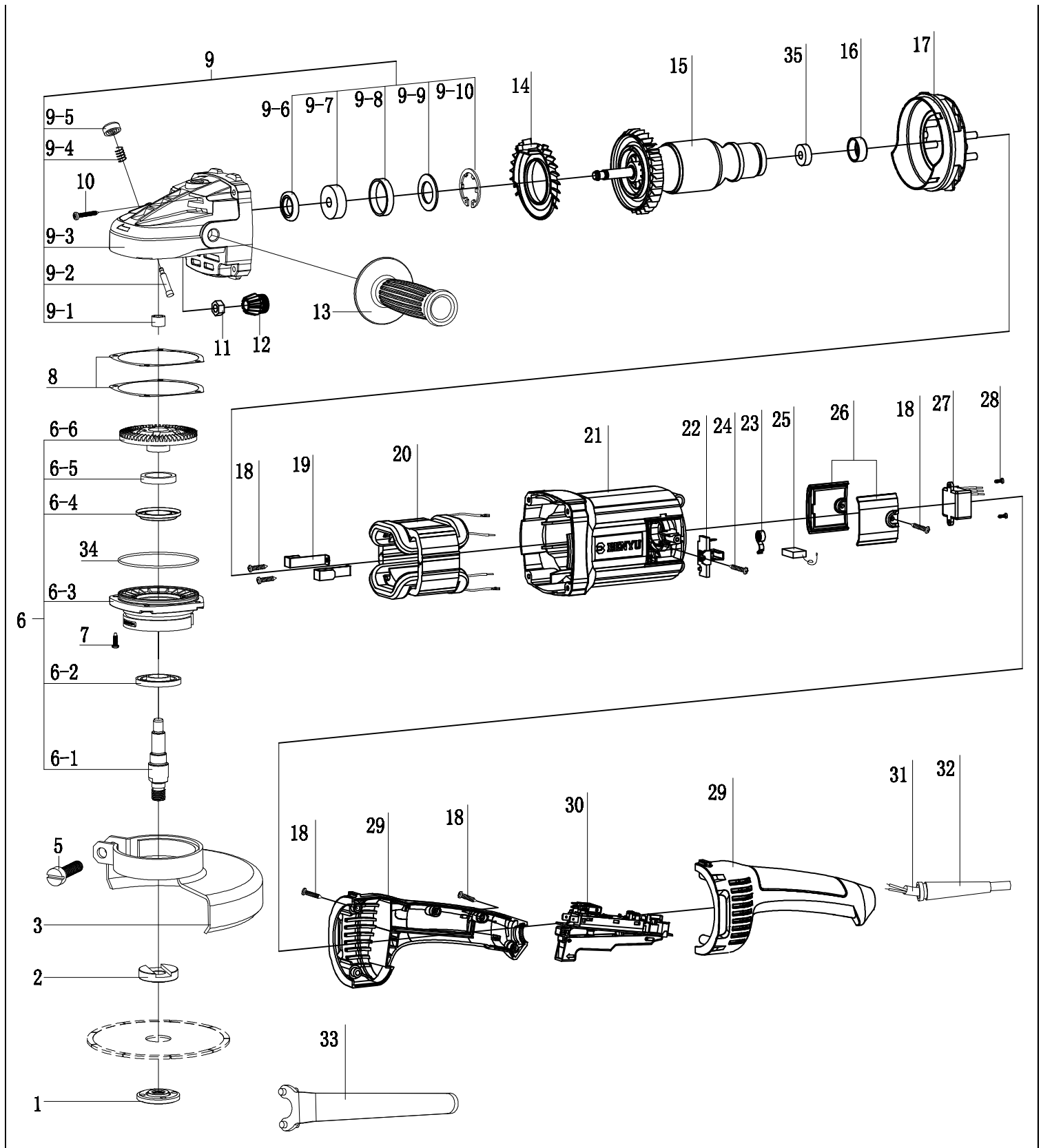
9
9-5
9-4
10
9-3
9-2
9-1
9-6
9-7
9-8
9-9
9-10
14
15
35
16
17
13
11
12
8
6-6
6-5
6-4
34
6-3
6
7
6-2
6-1
5
3
2
1
18
19
20
21
22
24
23
25
26
18
27
28
18
29
18
30
29
31
32
33