Fig 1

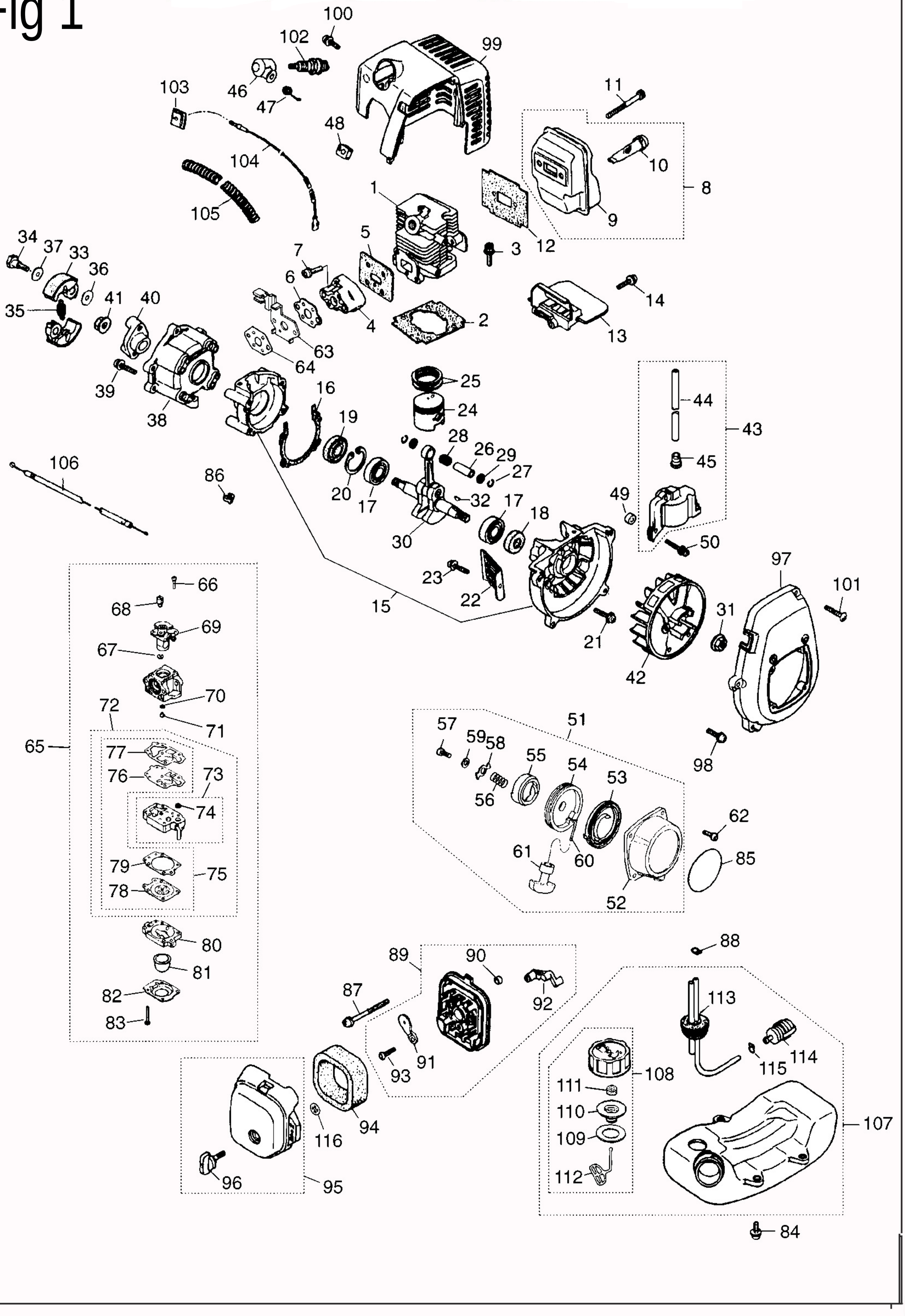
100
102
99
103
46
47
11
48
104
10
8
105
1
9
12
5
3
7
6
4
2
14
13
34
37
33
36
35
41
40
63
64
39
38
25
24
16
19
28
26
29
27
44
43
45
106
86
20
17
32
17
18
49
30
50
23
22
15
21
42
97
101
31
66
68
69
67
70
72
71
65
77
76
73
74
79
75
78
80
81
82
83
57
59
58
55
54
53
51
56
61
60
62
85
52
98
88
89
90
87
92
91
93
113
114
115
108
111
110
109
112
107
94
116
96
95
84

Key#	Description	Q'ty	Note	Key#	Description	Q'ty	Note
1	Cylinder	1		59	Washer	1	
2	Gasket, base	1		60	Rope	1	
3	Bolt, M5x22	2		61	Knob	1	
4	Insulator	1		62	Screw	4	
5	Gasket, insulator	1		63	Bracket	1	
6	Gasket, carb	1		64	Gasket, carburetor	1	
7	Screw, M5x20	2		65	Carburetor ass'y	1	
8	Muffler ass'y	1		66	Screw	2	
9	Muffler	1		67	Ring	1	
10	Spark arrester	1		68	Swivel	1	
11	Bolt, M5x50	2		69	Valve ass'y	1	
12	Gasket, muffler	1		70	O-ring	1	
13	Plate, muffler	1		71	Jet #37	1	
14	Screw, M4x16	1		72	Rebuilt Kit	1	
15	Crancase comp.	1		73	Body ass’y	1	
16	Gasket, case	1		74	Screen	–	
17	Bearing	2		75	Gasket Kit	1	
18	Oil seal	1		76	Diaphragm, pump	–	
19	Oil seal	1		77	Gasket, pump	–	
20	Snap ring	1		78	Diaphragm	–	
21	Bolt, M5x30	4		79	Gasket, diaphragm	–	
22	Guard	1		80	Body, purge	1	
23	Screw, M5x14	1		81	Pump, priming	1	
24	Piston	1		82	Cover, pump	1	
25	Ring, piston	2		83	Screw	4	
26	Pin, piston	1		84	Screw	3	
27	Snap ring	2		85	Label, recoil	1	
28	Bearing	1		86	Cap	1	
29	Washer	2		87	Screw, M5x60	2	
30	Crankshaft comp.	1		88	Clip	1	
31	Nut	1		89	Body ass'y	1	
32	Key	1		90	Sleeve	2	
33	Shoe	2		91	Plate, choke	1	
34	Screw	2		92	Lever, choke	1	
35	Spring	1		93	Screw	1	
36	Washer	2		94	Element	1	
37	Washer	2		95	Cover ass'y	1	
38	Case, clutch	1		96	Knob	1	
39	Screw, M5x16	4		97	Cover, fan	1	
40	Plate, clutch	1		98	Screw, M5x20	4	
41	Nut	1		99	Cover, engine	1	

42	Rotor	1		100	Screw, M5x12	1	
43	Coil ass'y	1		101	Screw	1	
44	Cord	1		102	Spark plug	1	
45	Cap	1		103	Grommet	1	
46	Cap, spark plug	1		104	Cord comp.	1	
47	Spring	1		105	Tube	1	
48	Grommet	1		106	Cable comp.	1	
49	Spacer	2		107	Tank ass'y	1	
50	Bolt, M4x25	2		108	Cap ass'y	1	
51	Recoil ass'y	1		109	Packing	1	
52	Case, recoil	1		110	Holder	1	
53	Spring, Spiral	1		111	Filter	1	
54	Reel	1		112	Stopper	1	
55	Ratchet	1		113	Pipe comp.	1	
56	Spring	1		114	Filter ass'y	1	
57	Screw	1		115	Clip	1	
58	Retainer	1		116	Clip	1	

Fig.2

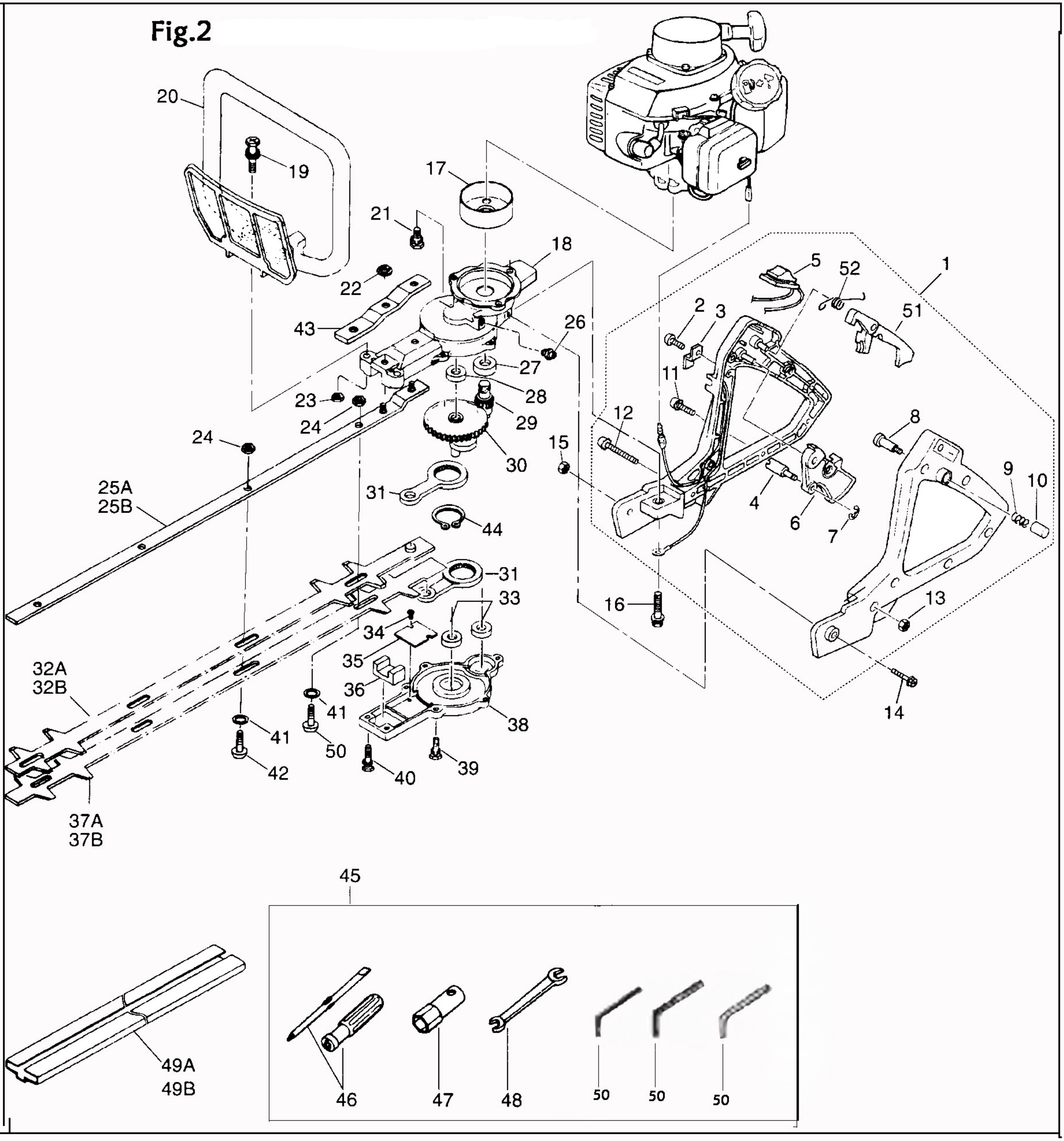
20
19
17
21
18
22
43
26
27
28
29
30
23
24
24
31
44
25A
25B
31
33
34
35
36
41
38
32A
32B
41
50
42
40
39
37A
37B
5
52
1
2
3
51
11
12
15
8
9
10
4
6
7
16
13
14
45
46
47
48
50
50
50
49A
49B

Key#	Description	Q'ty	Note	Key#	Description	Q'ty	Note
1	Rear handle ass'y	1		28	Bearing, 608Z	1	
2	Screw, M4x10	1		29	Pinion	1	
3	Plate	1		30	Gear comp.	1	
4	Cable end	1		31	Rod ass'y	2	
5	Switch ass'y	1		32A	Upper blade	1	
6	Throttle lever	1		32B	Upper blade	-	
7	Snap ring	1		33	Bearing, 608Z	2	
8	Pin	1		34	Screw, M3x5	2	
9	Spring	1		35	Plate	1	
10	Cap	1		36	Felt	1	
11	Screw, M4x16	5		37A	Lower blade	1	
12	Screw, M4x30	1		37B	Lower blade	-	
13	Nut, M6	6		38	Lower case	1	
14	Bolt, M6x50	1		39	Bolt, M5x16	5	
15	Nut, M6	1		40	Bolt, M5x20	2	
16	Bolt, M6x40	1		41	Washer	4	
17	Clutch drum	1		42	Screw, M6x19	3	
18	Middle case	1		43	Plate	1	
19	Bolt, M6x35	2		44	Snap ring	1	
20	Front handle	1		45	Tool set	1	
21	Bolt, M6x14	2		46	Screwdriver	1	
22	Nut, M5	2		47	Socket, Hex 3/4"	1	
23	Nut, M6	2		48	Spanner, 8x10	1	
24	Nut, M6U	4		49A	Cover, blade	1	
25A	Guide plate	1		49B	Cover, blade	-	
25B	Guide plate	-		50	Screw, M6x22	1	
26	Grease fitting	1		51	内六角扳手	1	
27	Bearing, 6001 2RS	1					