AC-5280E

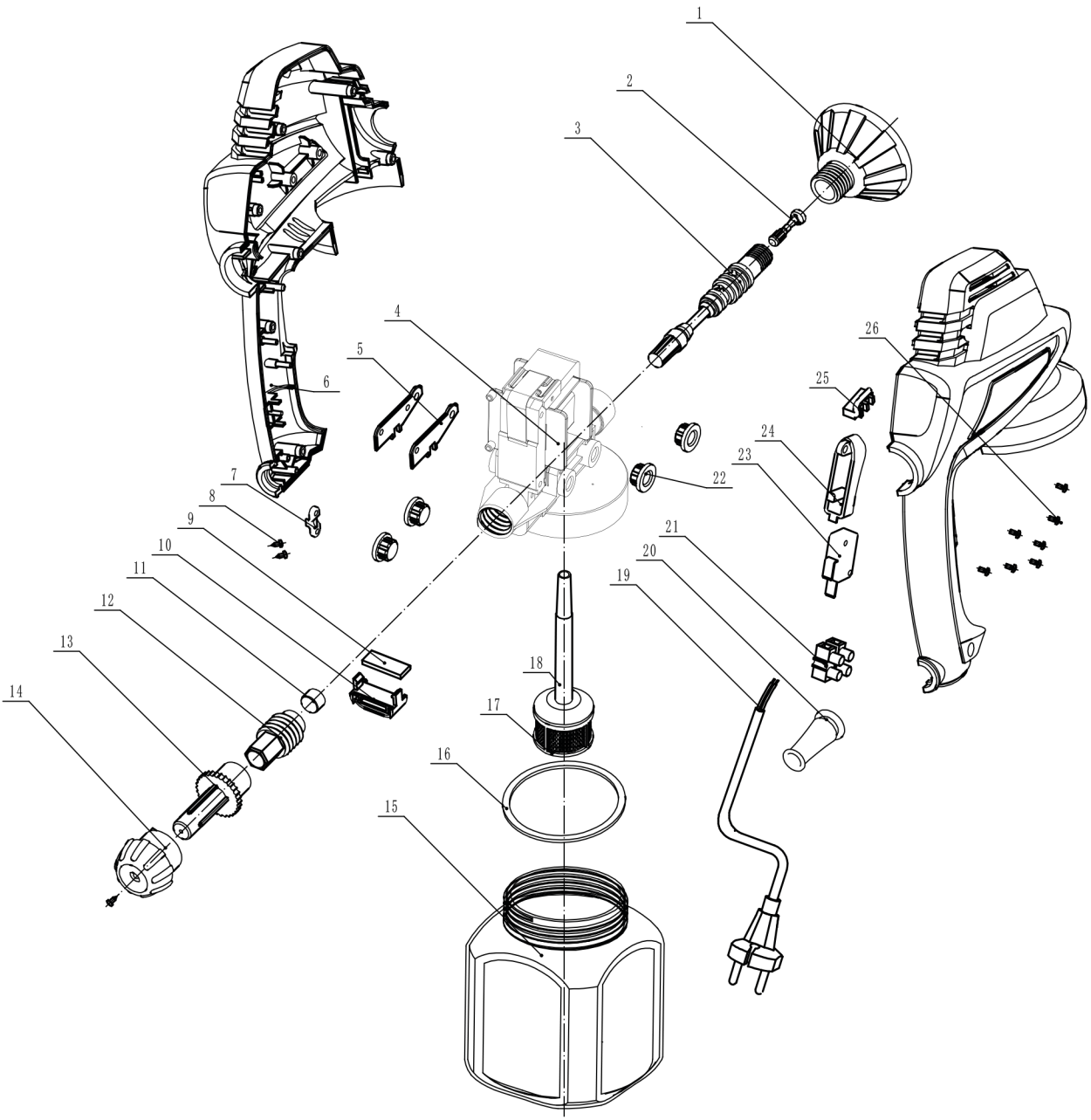

No.	Part Name
1	Spray hood components
2	valve core components
3	Plunger pump assembly
4	Base electromagnet assembly
5	Transformer caulking gasket
6	Left and right housing
7	Line pressing buttons
8	screw
9	Damping block2
10	Damping sleeve
11	Damping block3
12	regulating stem
13	Dividing button
14	knob
15	pot
16	seal ring
17	strainer
18	pipet
19	Plug
20	Wire sheath
21	terminal
22	cushion blocking
23	switch
24	trigger
25	Buckle
26	screw